RoHS
COMPLIANT

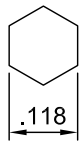

RECOMMENDED
CRIMPING TOOL SIZE

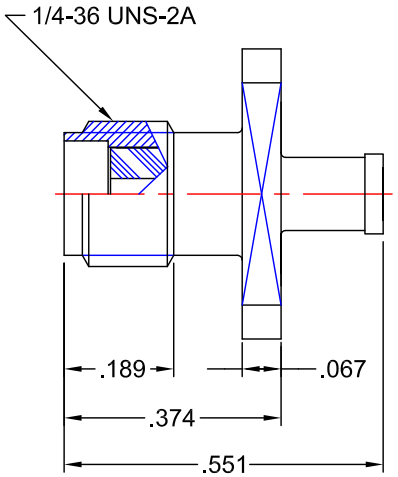

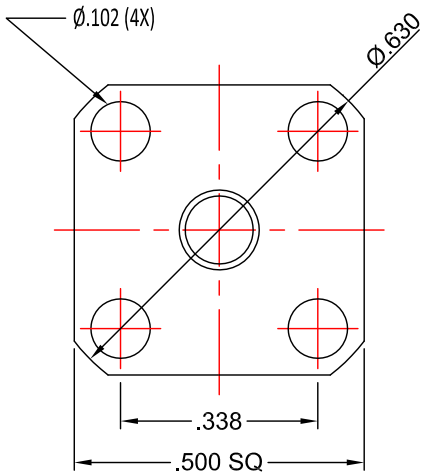

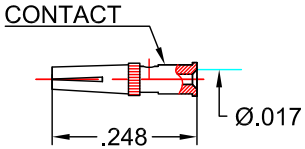

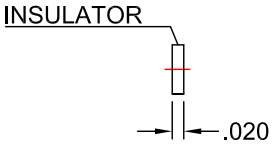

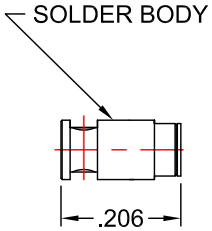

NOTES:

INTERFACE CONFORMS TO MIL-PRF-39012
AND MIL-STD-348 SMA SERIES

ELECTRICAL:

NOMINAL IMPEDANCE: 50Ω
FREQUENCY RANGE: DC TO 12 GHz

MATERIALS:

INSULATOR: TEFLON PER ASTM-D-1710
CONTACT: BERYLLIUM COPPER PER ASTM-B-196
BODY: 360 ALLOY BRASS 1/2 HARD PER ASTM-B-16
GASKET: SILCONE RUBBER PER ZZ-R-765

FINISHES:

CONTACT: GOLD PLATE PER MIL-DTL-45204
BODY: GOLD PLATE PER MIL-DTL-45204

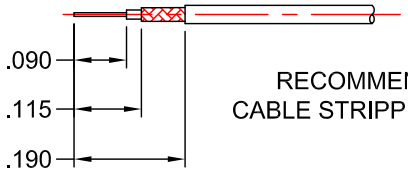

RECOMMENDED
CABLE STRIPPING DIMS

PROPRIETARY NOTICE
THIS DRAWING AND DESIGNES AND IDEAS EMBEDDED IN THE DEVICE TO WHICH IT RELATES AND THE METHOD OF PRODUCING THE DEVICE SHALL NOT BE EMPLOYED COPIED OR DISCLOSED TO ANYONE IN ANY MANNER WITHOUT THE WRITTEN CONSENT OF AN EZ FORM COMPANY OFFICIAL

APPD.	T.D.	
DATE	4/11/17	
BY	J.N.	
DATE	4/11/17	
DESCRIPTION	INITIAL RELEASE	
REV.	—	

UNLESS OTHERWISE SPECIFIED:
DIMENSIONS ARE IN INCHES:
TOLERANCES: NONE
SCALE 3:1

MATERIAL: SEE NOTES
FINISH: SEE NOTES

DRAWN	DATE	CHECKED	DATE
J.N.	4/11/17	T.D.	4/11/17
APPROVED A.T.	DATE 4/11/17	SHEET 1 OF 1	

EZ Form Cable Corporation
285 Welton Street
Hamden, CT 06517
WWW.ezform.com

TITLE
4-HOLE FLANGE MOUNT
JACK CRIMP FOR RG-178

A	CODE IDENT. 9W826	705593-001SMA	REV. -